casals
fans of innovation

Casals, new air

Amb el suport de:
ACCIÓ
Competitivitat per l'empresa
Generalitat de Catalunya

PROBAT EEC

Make it easy

Make it easy with **Probat EEC** motors (Eco Efficiency Casals) and join this technological jewel that will alter your forward-looking approach regarding electrical motors.

www.casals.tv

EEC, Casals Ventilación proposal of **brushless motors** made of permanent **magnet**. The use of this technology in fans provide **great advantages** such as efficiency improvement, the reduction of noise, scant maintenance , an increase of the useful life of the machine and a large control and simplicity of the product.

CONTRUCTIVE DIFFERENCES

TRADITIONAL MOTOR	EEC MOTOR
It requires a larger volume of sheet to create the magnetic field and power	As it has high energy magnets it allows sheet volume saving
The 30% of losses come from the rotor	Losses are virtually null, a fact that allows the motor to be up to 75% smaller and efficient
Winding (stator) with large amounts of copper	Less copper in winding therefore, more saving at production
No controller is needed to work. It usually contains only 1 speed motor	It needs an electrical controller and the same set (motor + controller) allows many velocities

ELECTRONIC CONCEPT

The EEC works in a similar way as an inverter but it is optimized to the fan performance.

This type of electronics allows the motor speed to be adjustable to any value. This makes the set able to work at different speed regimes, creating an area or working air flow map- pressure. Traditional induction motors only work one speed therefore, only one curve. It will give us:

VERSATILITY

As it has a wide leeway margin, the fan is more adaptable to the new applications it is made for.

FLEXIBILITY

As each model may contain multiple applications, the number of models to produce simplifies, that is, the stock is reduced.

GREAT CONTROL

Possibility to connect both airflow and pressure sensors to allow the fan to react according to received data.

VOLUME REDUCTION AND GREATER EFFICIENCY

The use of high energy permanent magnets allows the reduction of the set in a considerable way up to 75%. Reducing the size of the motor for a same power, we achieve to optimize the global performance of the machine, that is, we give greater gas power (airflow x pressure) at the same consumed electrical power.

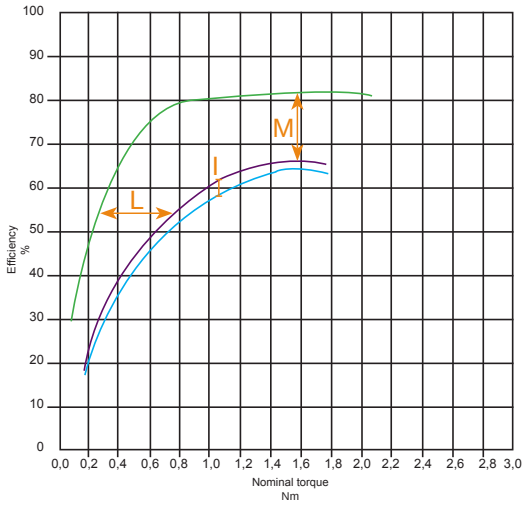

Induction motor IE1

Induction motor IE2

IE3 motor (Probat EEC)

L: EEC performance increasing at low torque

I: Increased efficiency with IE2 induction motor

M: Increased efficiency at nominal power with brushless motor

MOTOR COMPACTING AND PROTECTION

In this type of motors, the 90% of waste is generated in the estator. In the EEC, we make a compression in the winding with resin, giving a quicker and uniform dissipation of heat. The result is an increase in the motor life.

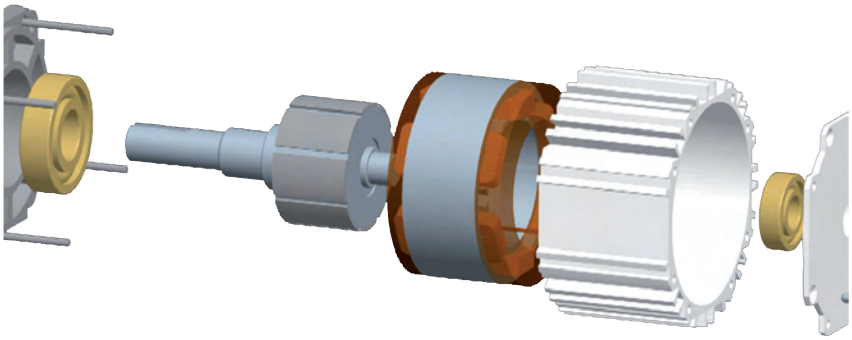

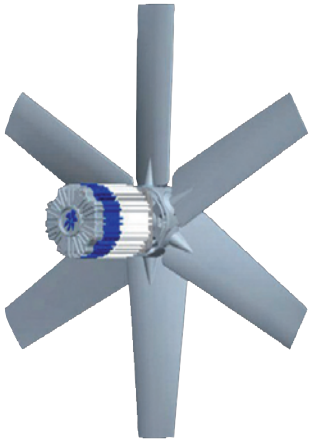

What can Casals EEC technology offer?

A contrasted increasing of energy efficiency

Current systems are based in induction motors that allow IE2 level efficiency but they are too expensive and too big for an IE3 level. In contrast, new technologies based on permanent magnets, motors reach IE3 efficiency levels easily. Besides, this high efficiency can be kept on different speeds, reduces the electromagnetic noise and the motor vibration.

Motor volume reduction

The fact of we work with high energy magnetic materials, as magnet based on weird earths (like Neodymium Iron-Borium), allows high induction values with a lower volume than the other market technologies. This is the reason why the weight of raw materials is more reduced and it improves the adaptability of the traction machine.

The reduction of diameter motor allows us to obtain a better working efficiency of the impeller, thereby reducing the power required and therefore the overall fan efficiency.

Components simplification (near future)

The fact of integrating the rotor with permanent magnets allows integrating the whole motor with the rest of the fan components. As a result, there are fewer components that make up the machine (Impeller - Magnet - Laminated - Copper - Insulation - motor bracket - fan).

Initially, our motor technology maintains an independence between the impeller and the axis. At the same time, we have integrated the motor controller, which will allow the final integration of motor and fan.

Compacted motor, substantial improvement of life and harsh environments

The compacted resin stator winding (where the 90% of the motor losses are generated in this type of engines) cause a higher heat dissipation and a complete protection for harsh environments increasing the motor life.

Less motorr for a wide range of fans

By studying the speed and torque range required, this technology allows a strong optimization of motor. As a result, we can combine the powers and dimensions reducing the logistic costs (the stock is fewer).

Motor-fan controller

This type of motors are available with electronic controller to operate, controlling the fan speed and load. Being able to have the speed control gives the possibility to cover a wide working range of the impellers. So, we don‘t refer to curve fan but a set of curves at different speeds (work areas and not curves). It gives us two important advantages:

- Best Fan adaptability to the application.
- Reduced number of models for the same purpose or application.

El control de la velocidad junto con el conocimiento de la carga del ventilador nos permite conocer el punto de trabajo y modificarlo a un nuevo punto según los requerimientos que queremos tanto manualmente como automáticamente con sensores exteriores, con lo que confiere una gran cantidad posibilidades en todas las aplicaciones y especialmente las que requieran un control de presión o caudal del aire así como una optimización del punto de consumo o eficiencia del conjunto.

Efficiency data

EEC 80

900 RPM					
RPM	P1 (W)	P2 (W)	Effm (%)	IL (A)	Efft (%)
900	59,0	50,9	86,3	0,61	82,1
900	114,0	98,0	86,0	1,04	82,4
900	174,0	145,1	83,4	1,49	81,1
900	238,0	192,3	80,8	1,94	78,2
900	306,0	239,4	78,2	2,39	76,0
900	381,0	286,5	75,2	2,92	72,7
900	461,0	333,6	72,4	3,46	70,2
900	550,0	380,8	69,2	4,02	67,3
900	766,0	475,0	62,0	5,42	60,0
900	1102,0	569,3	51,7	7,50	49,5

1350 RPM					
RPM	P1 (W)	P2 (W)	Effm (%)	IL (A)	Efft (%)
1350	92,0	80,6	87,6	0,86	84,8
1350	168,0	151,3	90,0	1,43	89,0
1350	252,0	222,0	88,1	2,02	86,0
1350	338,0	292,6	86,6	2,62	84,1
1350	432,0	363,3	84,1	3,22	82,2
1350	526,0	434,0	82,5	3,83	80,1
1350	632,0	504,7	79,9	4,52	78,2
1350	741,0	575,4	77,6	5,24	75,5
1350	894,0	646,1	72,3	6,14	70,6

2000 RPM					
RPM	P1 (W)	P2 (W)	Effm (%)	IL (A)	Efft (%)
2000	78,0	69,1	88,6	0,78	86,4
2000	137,0	121,5	88,7	1,21	86,8
2000	191,0	173,8	91,0	1,59	89,6
2000	248,0	226,2	91,2	1,99	89,8
2000	365,0	330,9	90,7	2,77	88,7
2000	482,0	435,6	90,4	3,49	89,1
2000	594,0	540,4	91,0	4,21	89,3
1900	714,0	612,8	85,8	4,93	83,9

	Point of maximum EEC motor efficiency
	Not recommended working area

P1 (W)	Electrical power
P2 (W)	Mechanical power
Effm (%)	Motor efficiency
IL (A)	Line Intensity
Efft (%)	Total efficiency (motor + electronics)

casals

Efficiency data

EEC 130

900 RPM					
RPM	P1 (W)	P2 (W)	Effm (%)	IL (A)	Efft (%)
900	113,0	98,2	86,9	1,06	86,9
900	219,0	192,4	87,9	1,79	86,7
900	324,0	286,7	88,5	2,52	85,3
900	431,0	380,9	88,4	3,25	85,6
900	667,0	569,4	85,4	4,77	82,5
900	916,0	757,9	82,7	6,44	79,4
900	1193,0	946,4	79,3	8,12	75,7
900	1530,0	1134,9	74,2	10,10	71,1
900	1857,0	1323,4	71,3	12,36	67,6

1400 RPM					
RPM	P1 (W)	P2 (W)	Effm (%)	IL (A)	Efft (%)
1400	192,0	162,3	84,5	1,62	84,5
1400	345,0	308,9	89,5	2,64	88,0
1400	501,0	455,5	90,9	3,71	89,5
1400	663,0	602,1	90,8	4,76	88,8
1400	995,0	895,3	90,0	6,81	87,6
1400	1345,0	1188,5	88,4	8,97	85,5
1400	1733,0	1481,8	85,5	11,36	82,4
1400	1873,0	1599,0	85,4	12,27	81,3
1400	1940,0	1628,4	83,9	12,42	81,3

2000 RPM					
RPM	P1 (W)	P2 (W)	Effm (%)	IL (A)	Efft (%)
2000	158,0	122,4	77,5	1,33	77,5
2000	266,0	227,1	85,4	2,07	86,0
2000	479,0	436,5	91,1	3,49	90,8
2000	711,0	646,0	90,9	4,99	89,7
2000	922,0	855,4	92,8	6,18	91,6

	Point of maximum EEC motor efficiency
	Not recommended working area

P1 (W)	Electrical power
P2 (W)	Mechanical power
Effm (%)	Motor efficiency
IL (A)	Line Intensity
Efft (%)	Total efficiency (motor + electronics)

RECOVERY COST

Comparison of a conventional motor and an EEC motor with 0,55kW rated power.
In the calculation we have considered that motor is working during 12h a day for 300 days a year.

Rated power (kW)	Conventional motor efficiency	Efficiency EEC 80 motor
0,55	60%	83%

Electrical power = Motor efficiency x Rated power

Electrical power (kW)	Annual consumption (€)
0,663	382
0,917	528

Aprox. price in € for Kw: 0,15

In this particular case the annual savings of an electronic motor EEC respect to a conventional engine is 146€.

Payback time for a motor without inverter:

Rated power (kW)	RRP Conventional motor	RRP EEC motor	Annual saving (€)	Recovery time (years)
0,55	170	630	146	3,14

Payback time for a motor with inverter:

Rated power (kW)	RRP Conventional motor	Inverter RRP	RRP EEC motor	Annual saving (€)	Recovery time (years)
0,55	170	345,80	630	146	0,78

This example has compared an EEC of 0.55 kw motor with a conventional engine and a conventional engine with an inverter of the of the same power. In just over three years the price is amortized in the first case, and in less than a year in the second case.